BFP-3 IRRIGATION BACKFLOW PREVENTER

For Non-Health Hazard Applications

Job Name _____ Contractor _____

Job Location _____ Approval _____

Engineer _____ Contractor's P.O. No. _____

Approval _____ Representative _____

Series 007

Double Check Valve Assemblies

Sizes: ½" – 2"

Series 007 Double Check Valve Assemblies are designed to protect drinking water supplies from dangerous cross-connections in accordance with national plumbing codes and water authority requirements for non-potable service applications such as irrigation, fireline, or industrial processing. Only those cross-connections identified by local inspection authorities as non-health hazard shall be allowed the use of an approved double check valve assembly.

Check with local authority having jurisdiction regarding vertical orientation, frequency of testing or other installation requirements.

The valve shall meet the requirements of ASSE Std. 1015 and AWWA Std. C510. Approved by the Foundation for Cross-Connection Control and Hydraulic Research at the University of Southern California.

Features

- Ease of maintenance — only one cover
- Top entry
- Replaceable seats and seat discs
- Modular construction
- Compact design
- Cast bronze body construction — ½" – 2"
- Top mounted ball valve test cocks
- Low pressure drop
- No special tools required for servicing
- ½" – 1" have tee handles

Specifications

A Double Check Valve Assembly shall be installed at each noted location. The assembly shall consist of two positive seating check modules with captured springs and rubber seat discs. The check module seats and seat discs shall be replaceable. Service of all internal components shall be through a single bronze or stainless steel access cover secured with stainless steel bolts. The assembly shall also include two resilient seated isolation valves; four top mounted, resilient seated test cocks. The assembly shall meet the requirements of ASSE Std. 1015 and AWWA Std. C510. Approved by the Foundation for Cross-Connection Control and Hydraulic Research at the University of Southern California. Assembly shall be a Watts Series 007.

1" 007M1QT

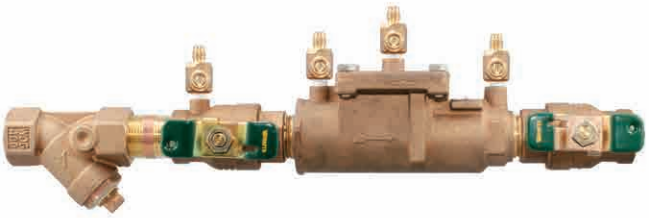

1" 007M1QT-S

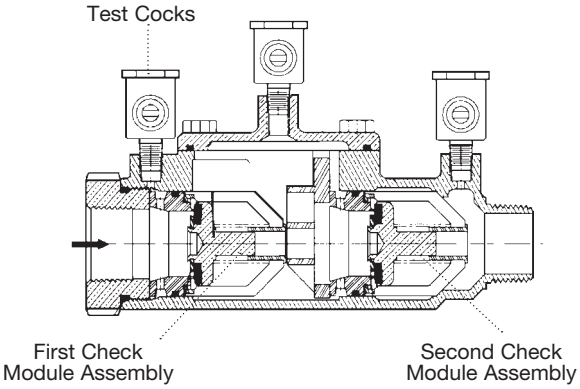

The 007 Series features a modular design concept which facilitates complete maintenance and assembly by retaining the spring load.

Now Available
WattsBox Insulated Enclosures.
For more information, send for literature ES-WB.

NOTICE

Inquire with governing authorities for local installation requirements

Watts product specifications in U.S. customary units and metric are approximate and are provided for reference only. For precise measurements, please contact Watts Technical Service. Watts reserves the right to change or modify product design, construction, specifications, or materials without prior notice and without incurring any obligation to make such changes and modifications on Watts products previously or subsequently sold.

BFP-3 IRRIGATION BACKFLOW PREVENTER

Pressure — Temperature

½" – 2"

Temperature Range: 33°F – 180°F (0.5°C – 82°C).

Maximum Working Pressure: 175psi (12.1 bar).

Standards

ASSE Std. 1015, AWWA Std. C510

IAPMO PS31, CSA B64.5

Approvals

† ASSE, AWWA, IAPMO, CSA, UPC

▲ Approved by the Foundation for Cross-Connection Control and Hydraulic Research at the University of Southern California.

• Models LF and S are not listed.

◆ UL Classified (LF models only) ¾" – 2" (except 007M3LF)

* Horizontal and vertical "flow up" approval on all sizes

Suffix:

S - bronze strainer

LF - without shutoff valves

SH - stainless steel ball valve handles

HC - 2½" inlet/outlet fire hydrant fittings (2" valve)

Prefix:

U - Union connections

Dimensions – Weights

Models

Sizes: ½" – 2"

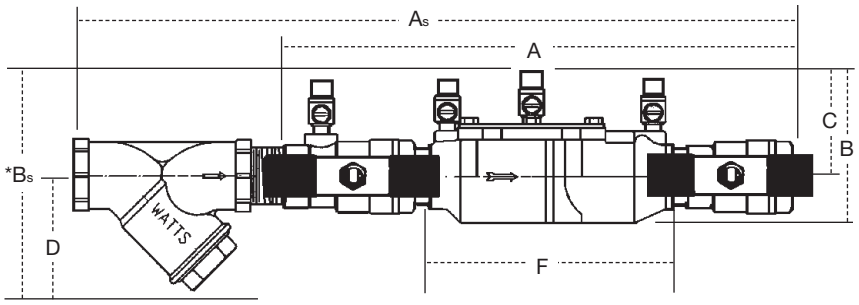

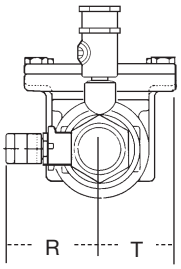

*Subscript 'S' = strainer model

MODEL	SIZE	DIMENSIONS																WEIGHT	
		A		B		C		D		F		G		R		T			
	in.	in.	mm	in.	mm	in.	mm	in.	mm	in.	mm	in.	mm	in.	mm	in.	mm	lbs.	kgs.
†▲ 007QT	½	10	254	4⅝	117	2 7/16	62	—	—	5	127	3⅜	85	2 5/16	59	2 1/16	52	4.5	2
†▲ 007M3QT	¾	11⅛	282	4	102	3⅛	79	—	—	6 3/16	157	3 7/16	87	2⅛	54	15/16	33	5	2.3
†▲ 007M1QT	1	13¼	337	5⅛	130	4	102	—	—	7½	191	3⅜	85	1 11/16	43	1 11/16	43	12	5.4
†▲ 007M2QT	1¼	16⅜	416	5	127	3 5/16	84	—	—	9½	241	5	127	3	76	2	50	15	6.8
†▲ 007M2QT	1½	16¾	425	4⅞	124	3½	89	—	—	9¾	248	5 13/16	148	3⅛	79	2 11/16	68	15.9	7.2
†▲ 007M1QT	2	19½	495	6¼	159	4	102	—	—	13⅜	340	6⅛	156	3 7/16	87	2 11/16	68	25.7	11.7
• 007QT-S	½	13	330	6	152	2 7/16	62	3	76	5	127	3⅜	85	2 5/16	59	2 1/16	52	5.5	2.5
• 007M3QT-S	¾	14½	368	6⅛	156	3⅛	79	3	76	6 3/16	157	3 7/16	87	2⅛	54	15/16	33	6.7	3.1
• 007M1QT-S	1	17 15/16	157	7¾	197	4	102	3¼	83	7½	191	3⅜	85	1 11/16	43	1 11/16	43	14	6.4
• 007M2QT-S	1¼	21½	546	7 1/16	179	3 5/16	84	3½	83	9½	241	5	127	3	76	2	50	19	8.6
• 007M2QT-S	1½	25 1/16	637	7 1/16	179	3½	89	3¾	95	9¾	248	5 13/16	148	3⅛	79	2 11/16	68	19.6	8.9
• 007M1QT-S	2	27¼	692	8¾	222	4	102	4	102	13⅜	340	6⅛	156	3 7/16	87	2 11/16	68	33.5	15.2

Suffix HC — Fire Hydrant Fittings dimension "A" = 23½" (594mm)

BFP-3 IRRIGATION BACKFLOW PREVENTER

Dimensions – Weights

1" U007M1QT

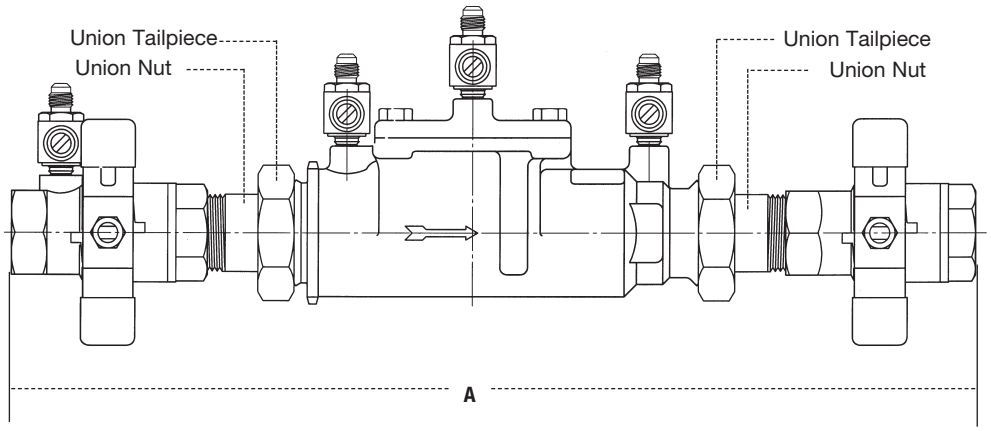

Sizes: ½" – 2"

MODEL	SIZE	DIMENSIONS	
		A	
	in.	*in.*	*mm*
U007QT	½	12 13/16	326
U007M2QT	¾	13 13/16	350
U007M2QT	1	16 5/8	422
U007M2QT	1¼	20¾	527
U007M2QT	1½	21½	546
U007M1QT	2	24½	622

BFP-3 IRRIGATION BACKFLOW PREVENTER

Capacity

As complied from documented Foundation for Cross-Connection Control and Hydraulic Research at the University of Southern California lab tests.

* Typical maximum system flow rate (7.5 feet/sec., 2.3 meters/sec.)
** UL rated flow

½" (15mm)

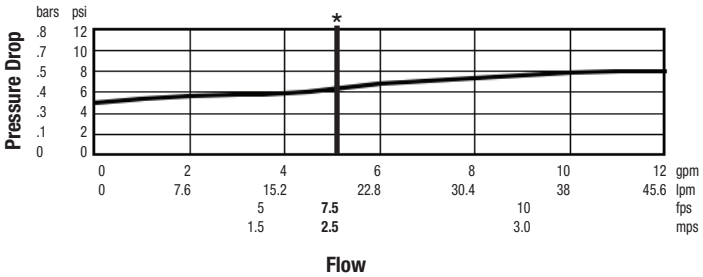

1½" (40mm)

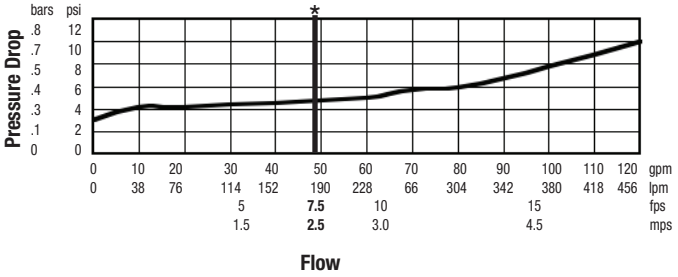

¾" (20mm)

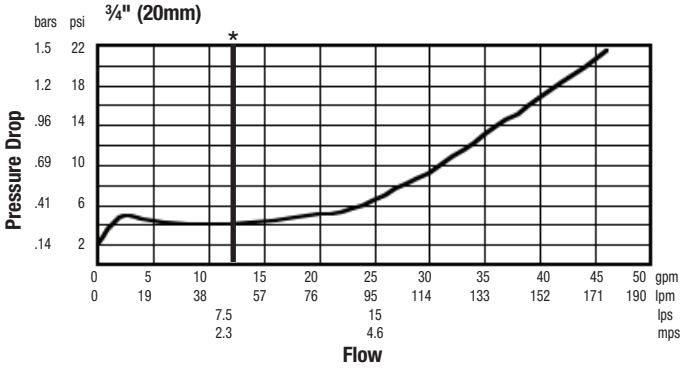

2" (50mm)

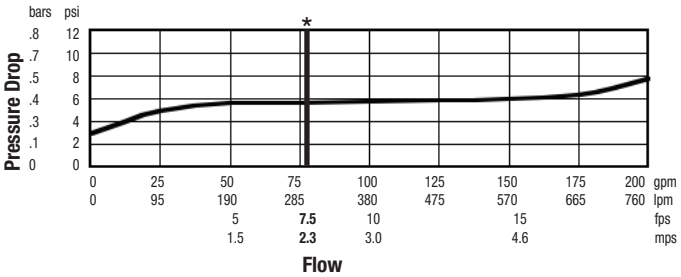

1" (25mm)

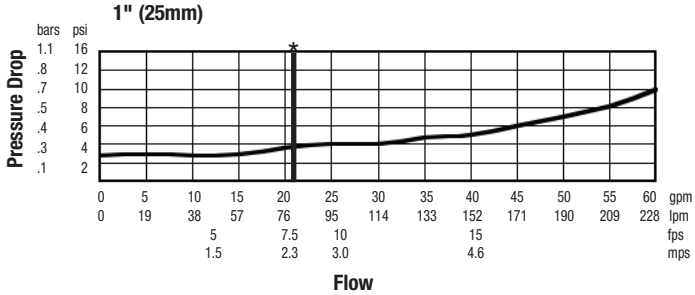

1¼" (32mm)

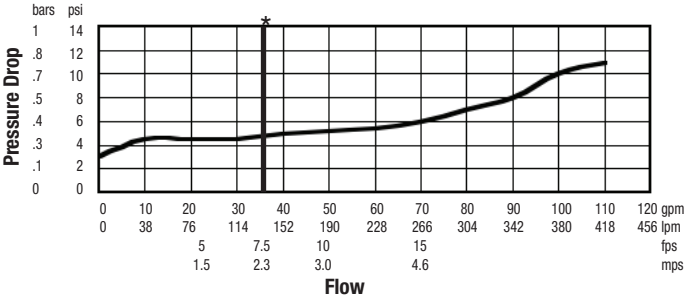

WATTS®

A Watts Water Technologies Company

ISO 9001-2008 CERTIFIED

USA: Tel: (978) 688-1811 • Fax: (978) 794-1848 • www.watts.com
Canada: Tel: (905) 332-4090 • Fax: (905) 332-7068 • www.watts.ca

© 2013 Watts